Pompe neuve Monocellulaire EBARA EBLOC 50/250 18.5kW

Pompe "Neuve" EBARA G.M Sic/Carbone/EPDM Pompe Monobloc selon Norme EN 733 NFE 44111 Version monobloc arbre inox 304. Puissance : 18,5kW Débit : 40 à 80 m3/h Pression : 6.5 à 4.8 bar

Marque : ÉBARA
Référence : EBARA-EBLOC-50-250-18,5kW

Critères associés :
Type de fluide : Eau claire
Environnement : Collectivité, Industrie (Triphasée)
Type de produit : Pompes

EBARA EBLOC 50/250 18,5kW

CENTRIFUGAL MONOBLOC PUMPS according to DIN 24255 standard in cast iron

Close-coupled Mono-bloc centrifugal pump in accordance to DIN 24255 pump performance. Applications include water boosting, cold and hot water systems, air-conditioning, washing systems and most industrial applications. Available in 2 versions, MDM in 2 Pole and MDM4 in 4 Pole.

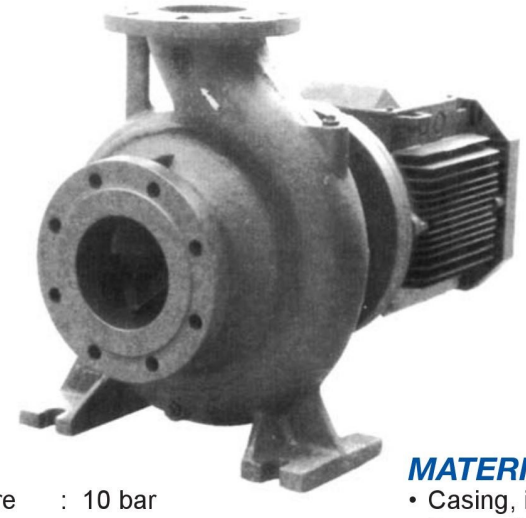

SPECIFICATIONS

- Maximum working pressure : 10 bar
- Maximum liquid temperature
  Standard version : -10°C to +90°C
  Special version -20°C to +120°C
  (optional, upon request)

UP TO REQUEST: COUNTER FLANGES SET

- Scope of supply: counter flanges suction/discharge side, gasket and bolts.

MATERIALS

- Casing, impeller in GG-20
- Pump shaft: AISI 304
- Mechanical seal in carbon/ceramic/NBR

TECHNICAL DATA

- 2 pole motor
- IP55 protection, insulation Class F
- Suitable for continuous operations
- 230/400V ± 10%, 50Hz up to 4kW inclusive 400/690V ± 10%, 50Hz

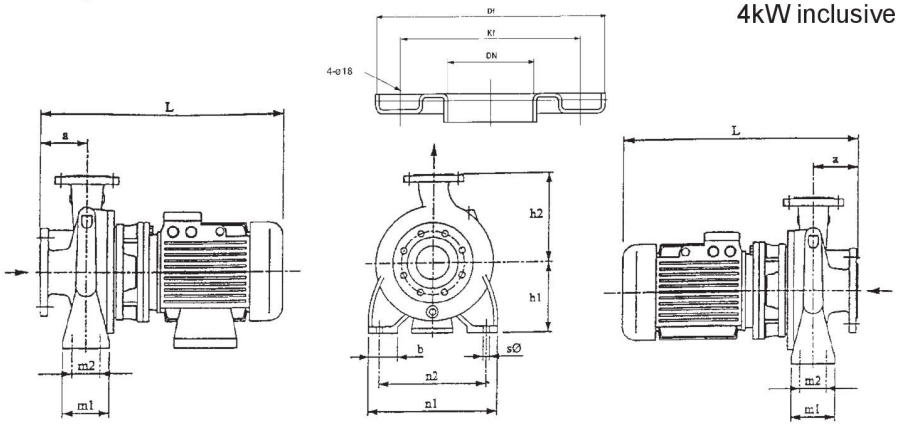

DN	Kf	Df
32	100	140
40	110	150
50	125	165
65	145	185
80	160	200
100	180	220
125	210	250
150	240	285
200	295	340

PERFORMANCE TABLE

MDM - 2900 r.p.m.

Pump type	kW	HP		Q=Capacity																	
			l/min	400	450	500	550	600	666	700	800	1000	1200	1333	1400	1500	1700	2000	2100	2300	2666	3000
Three-phase			m³/h	24	27	30	33	36	40	42	50	60	72	80	84	90	102	120	126	138	160	180
				H=Total head																	
MDM 50/200-15	15.0	20.0		-	-	-	-	-	54	54	53	51	49	45	43	40	35	-	-	-	-	-
MDM 50/200-18.5	18.5	25.0		-	-	-	-	-	60	60	59	57.5	55.5	52.5	50	48.5	43.5	-	-	-	-	-
MDM 50/200-22	22.0	30.0		-	-	-	-	-	66	66	65	64	62	59	57	55	51	-	-	-	-	-
MDM 50/250-15	15.0	20.0		-	-	-	-	-	59	59	56	52	45.5	38	-	-	-	-	-	-	-	-
MDM 50/250-18.5	18.5	25.0		-	-	-	-	-	65	65	63	59	55.5	48	-	-	-	-	-	-	-	-
MDM 50/250-22	22.0	30.0		-	-	-	-	-	74	74	73	70	65.5	58	54	50	-	-	-	-	-	-
MDM 80/160-7.5	7.5	10.0		-	-	-	-	-	-	-	-	23.5	23	22.5	21	21.5	20.5	16.5	14	10	-	-
MDM 80/160-9.2	9.2	12.5		-	-	-	-	-	-	-	-	27	26.5	26	25.5	25	23.5	20.5	19	15	-	-
MDM 80/160-11	11.0	15.0		-	-	-	-	-	-	-	-	20.5	30	29.5	29	28.5	27	25	23.5	20.5	14	-

DIMENSION

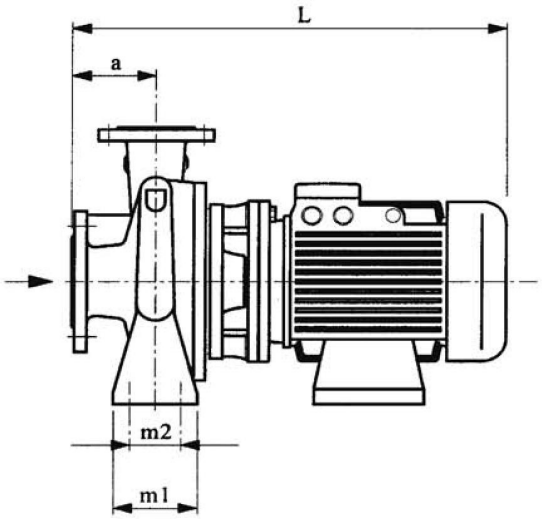

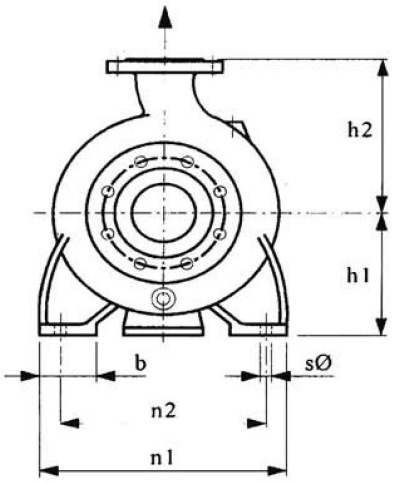

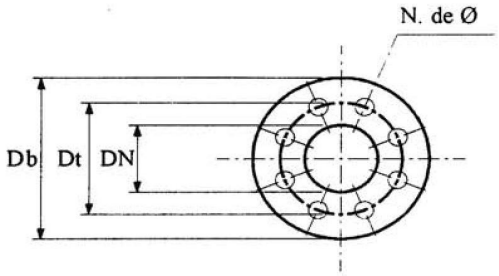

PUMP	BRIDAS - FLANGES PN - 16									
	ASPIRACION - SUCTION					IMPULSION - DISCHARGE				
	DN	Db	Dt	N.	Ø	DN	Db	Dt	N.	Ø
MDM-32	50	165	125	4	18	32	140	100	4	18
MDM-40	65	185	145	4	18	40	150	110	4	18
MDM-50	65	185	145	4	18	50	165	125	4	18
MDM-65	80	200	160	8	18	65	185	145	4	18
MDM-80	100	220	180	8	18	80	200	160	8	18
MDM-100	125	250	210	8	18	100	220	180	8	18

MDM, 2900 RPM

PUMP	MOTOR		DIMENSIONS mm										
	Kw	HP	a	L	m1	m2	n1	n2	b	s	h1	h2	Kg
32/200	7.5	10	80	665	100	70	240	190	50	14	160	180	94
32/200	9.2	12.5	80	765	100	70	240	190	50	14	160	180	104
32/250	9.2	12.5	100	785	125	95	320	250	65	14	180	225	109
32/250	11	15	100	785	125	95	320	250	65	14	180	225	119
32/250	15	20	100	785	125	95	320	250	65	14	180	225	126
40/200	9.2	12.5	100	785	100	70	265	212	50	14	160	180	105
40/250	11	15	100	785	125	95	320	250	65	14	180	225	123
40/250	15	20	100	785	125	95	320	250	65	14	180	225	130
40/250	18.5	25	100	785	125	95	320	250	65	14	180	225	135
40/250	22	30	100	855	125	95	320	250	65	14	180	225	180
50/200	15	20	100	785	100	70	265	212	50	14	160	200	121
50/200	18.5	25	100	785	100	70	265	212	50	14	160	200	136

MDM, 2900 RPM

PUMP	MOTOR		DIMENSIONS mm										
	Kw	HP	a	L	m1	m2	n1	n2	b	s	h1	h2	Kg
50/200	22	30	100	855	100	70	265	212	50	14	160	200	171
50/250	15	20	100	785	125	95	320	250	65	14	180	225	132
50/250	18.5	25	100	785	125	95	320	250	65	14	180	225	147
50/250	22	30	100	855	125	95	320	250	65	14	180	225	182
80/160	7.5	10	125	710	125	95	320	250	65	14	180	225	98
80/160	9.2	12.5	125	810	125	95	320	250	65	14	180	225	108
80/160	11	15	125	810	125	95	320	250	65	14	180	225	118
80/160	15	20	125	810	125	95	320	250	65	14	180	225	125
80/160	18.5	25	125	810	125	95	320	250	65	14	180	225	140
80/160	22	30	125	880	125	95	320	250	65	14	180	225	175

Lien vers la fiche du produit